REV	MODIFICATION	DATE	DRAW

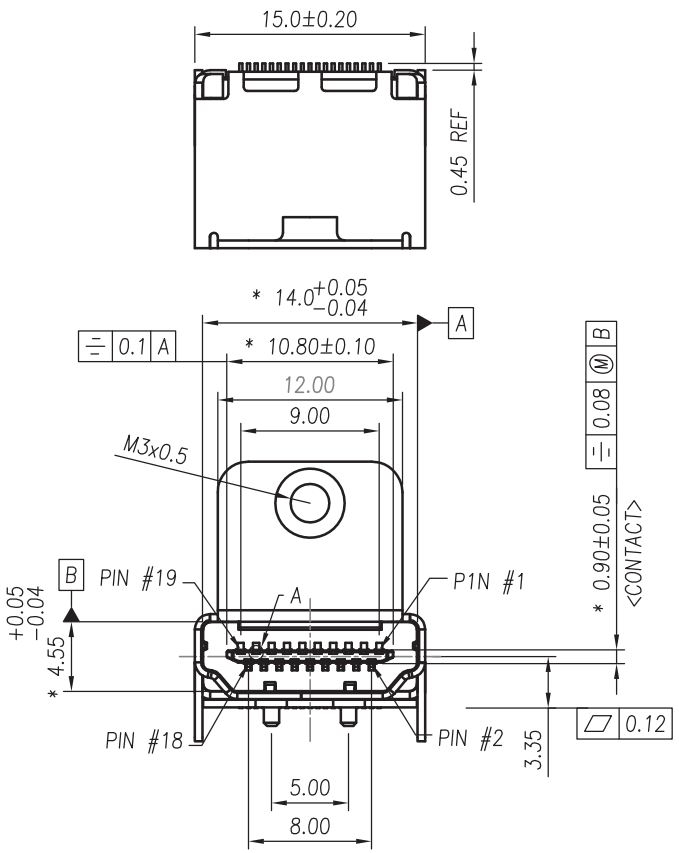

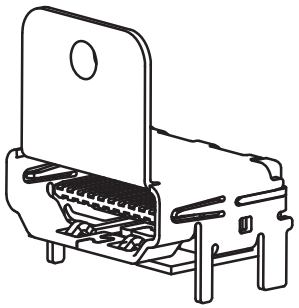

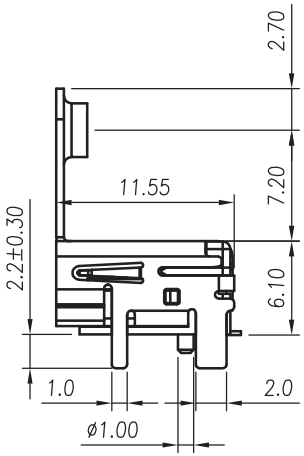

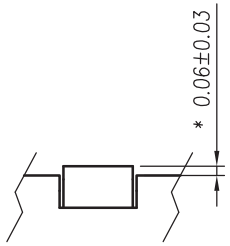

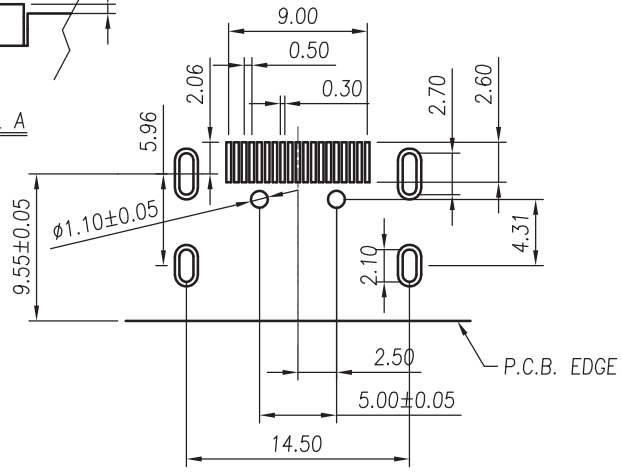

RECOMMENDED P.C.B Layout

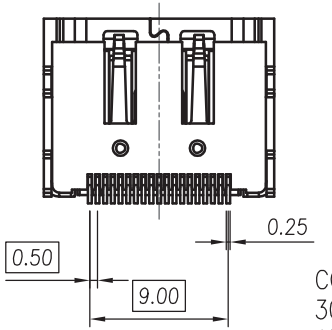

NOTES:

1.MATERIAL:
HOUSINR: HIGH TEMPERTURE PLASTIC UL94V-0. COLOR IN BLACK
SHELL: PHOSPHOR BRONZE.
TERMINAL: PHOSPHOR BRONZE.

2.PLATING:
TERMINAL: CONTACT AREA: SEE "ORDERING INFORMATION"
SOLDER AREA: 100 u" TIN PLATING.
UNDER PLATED: 50u" NICKEL.
SHELL: 100u" SOLDERABLE NICKEL

3.COPLANARITY IS 0.12 MAX.

4.ORDERING INFORMATION
HDMTL-219XXXFAX
- SHELL PLATING :
  - 0: Ni
  - 1: GOLD FLASH
- CONTACT AREA PLATING:
  - 30 -- 30u" GOLD PLATING
  - 15 -- 15u" GOLD PLATING
- PACKAGE TYPE:
  - 0: TRAY
  - 1: TAPE REEL

DIMENSION IN mm [Inch]		PROD. SPEC. SP0097-A	ALMITA CO., LTD.
TOLERANCE UNLESS OTHERWISE SPECIFIED		PKG. SPEC.	TITLE HDMI RECEPTACLE SMT TYPE A WITH FLANGE <SHELL DIP> — CUSTOMER DRAWING
.X±0.30	X.°± 3°	APPROVE	FILE NO. KFP-097 — DWG NO. HDMTL-219XXXFAX
.XX±0.20	.X°±	CHECK	
.XXX±	.XX°±	DRAW	SIZE A4 — PROJ. — SHEET 1 / 1 — SCALE 2:1 — REV A

8F-01-R10