USB A Male SMD Type

5075ARP Series

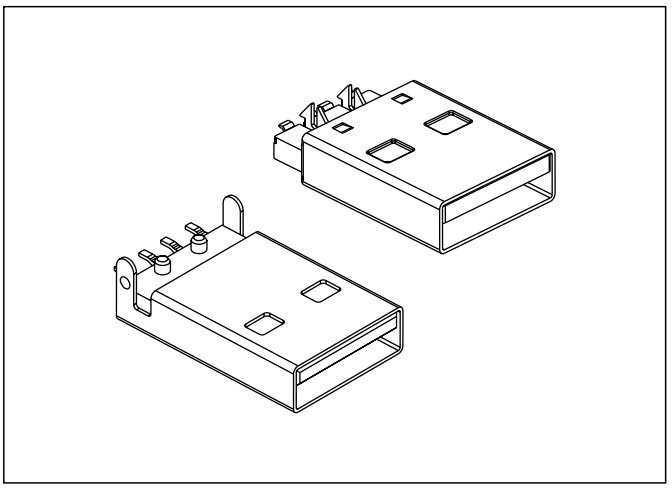

■ Specifications

Current rating:1.0A AC/DC
Voltage rating:30V AC/DC
Contact resistance:20m ohm. max.
Insulation resistance:1000M ohm. Min.
Withstanding voltage:750V AC for one minute
Operating temperature range:-40℃ to +105℃

■ Material and Finish

Insulator:High Temp. Plastic(UL94V-0)
Contact:Copper Alloy
Plating:Selective Gold Plated

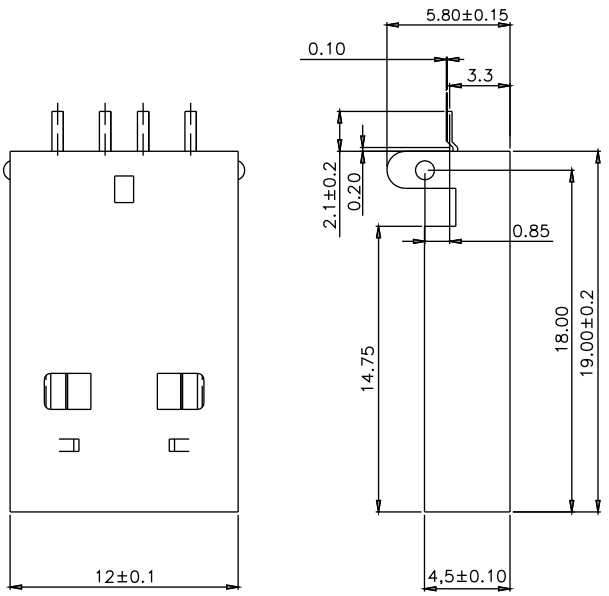

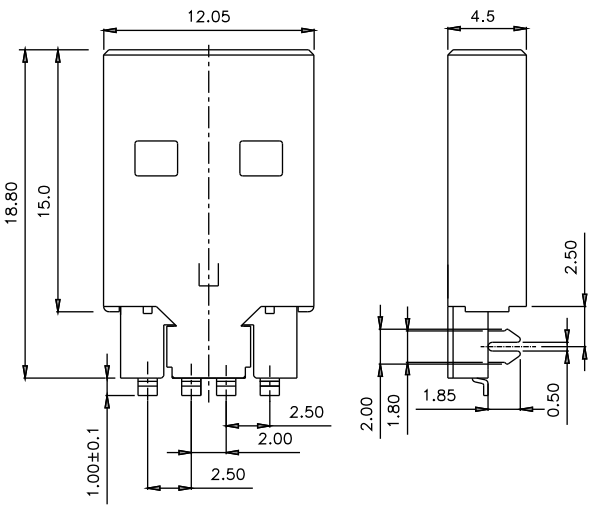

P/N:5075ARP-04-SM1

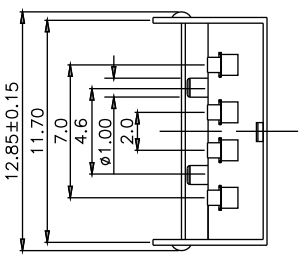

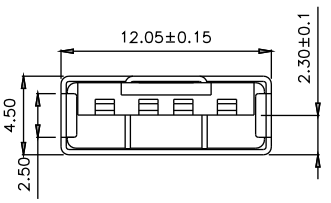

P/N:5075ARP-04-SM2

■ Ordering Information

5075ARP-04-SMX

❶ ❷ ❸

❶ ARP:A Type Male	❷ No. Of Contacts	❸ SM1:SM1 Type SM2:SM2 Type

■ Recommended PCB Layout

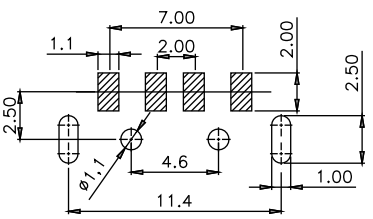

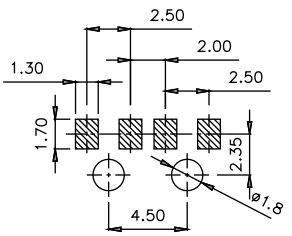

P/N:5075ARP-04-SM1

P/N:5075ARP-04-SM2

Unit:mm