Mini USB Connector Female 8 Ways

5075MMR Series

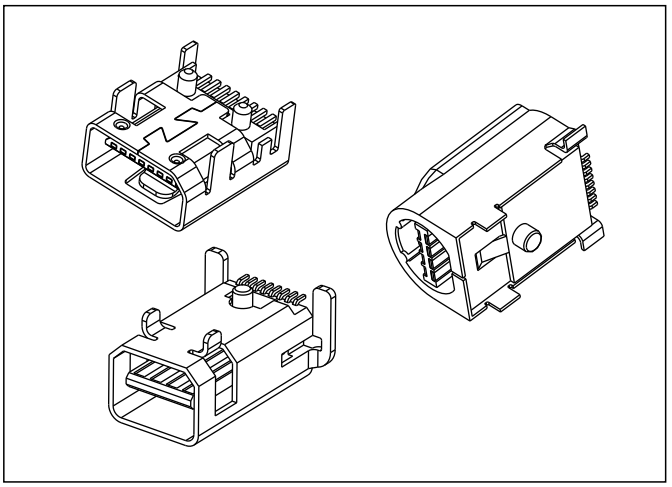

■ Specifications

Current rating:1.0A AC/DC
Voltage rating:30V AC/DC
Contact resistance:20m ohm. max.
Insulation resistance:1000M ohm. Min.
Withstanding voltage:750V AC for one minute
Operating temperature range:-40℃ to +105℃

■ Material and Finish

Insulator:High Temp. Plastic(UL94V-0)
Contact:Copper Alloy
Plating:Selective Gold Plated

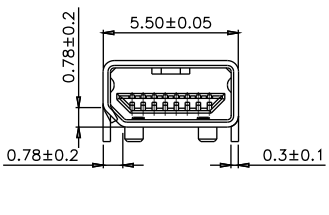

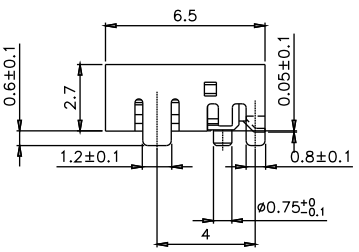

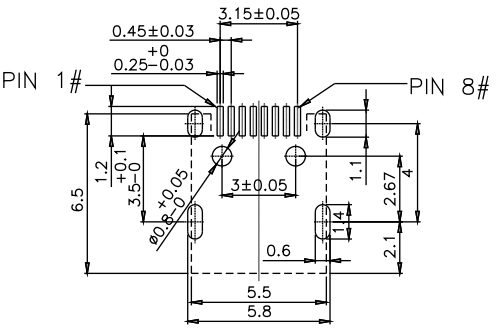

P/N:5075MMR-08A

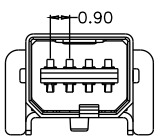

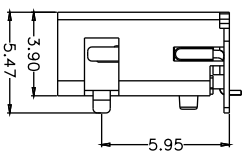

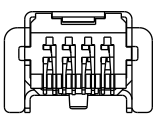

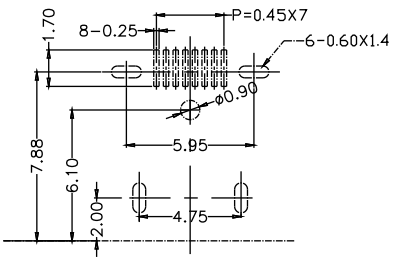

P/N:5075MMR-08B

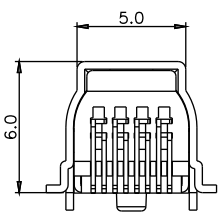

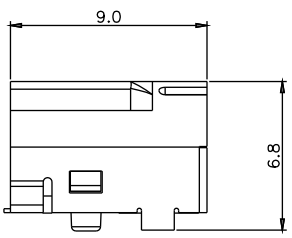

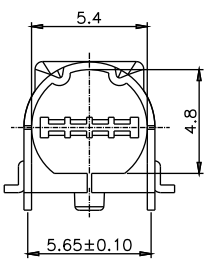

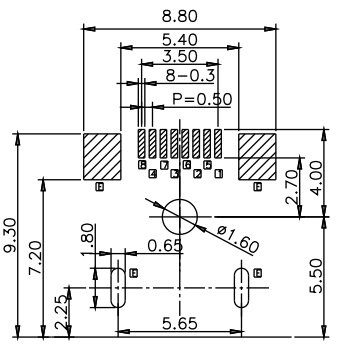

P/N:5075MMR-08-NK

Unit:mm